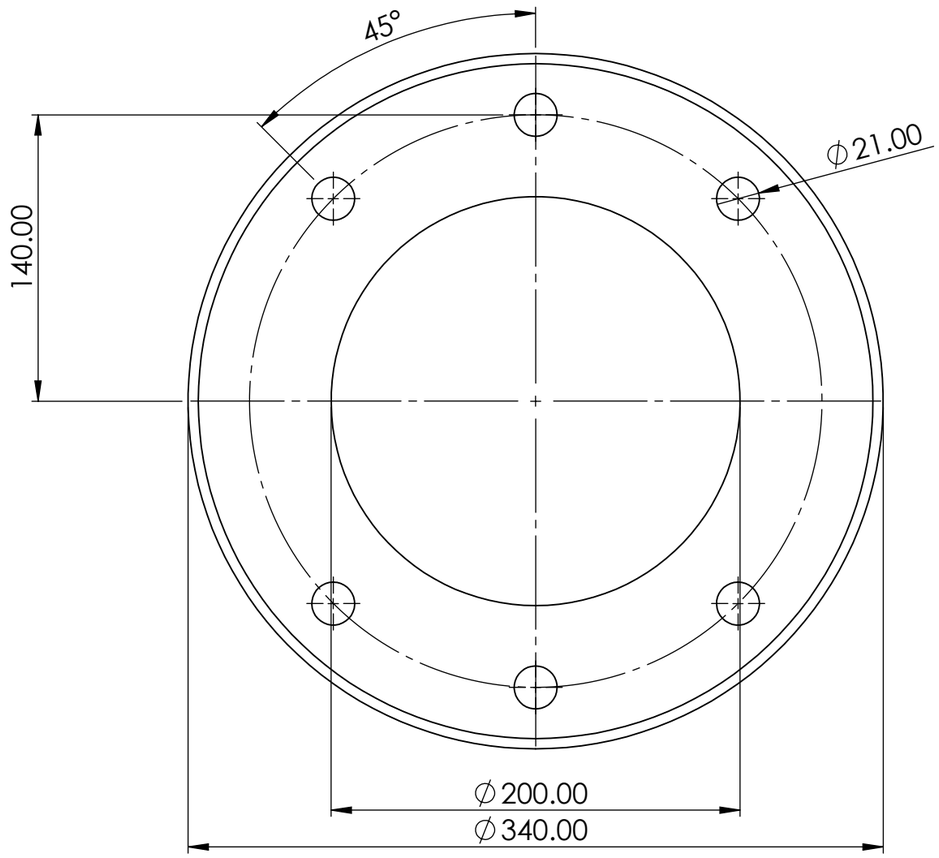

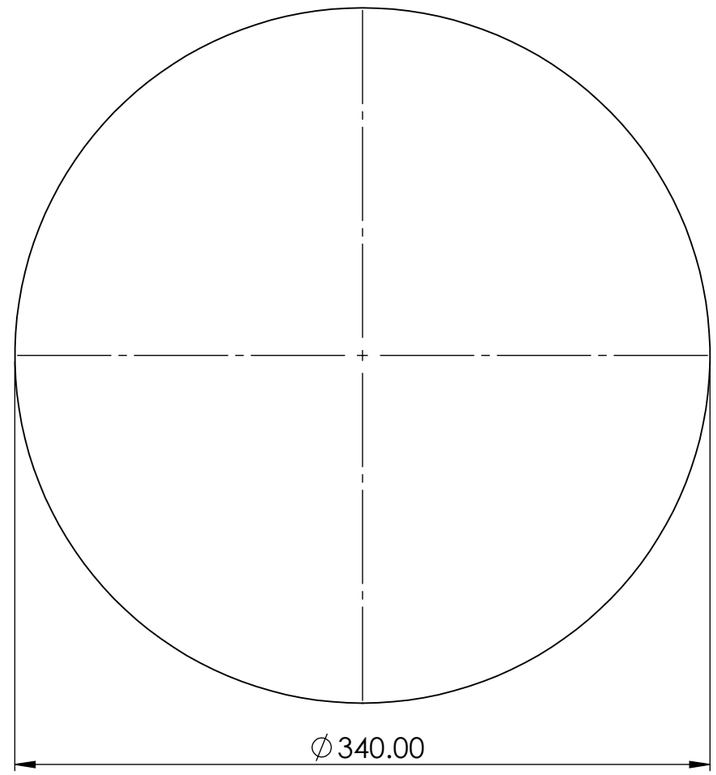

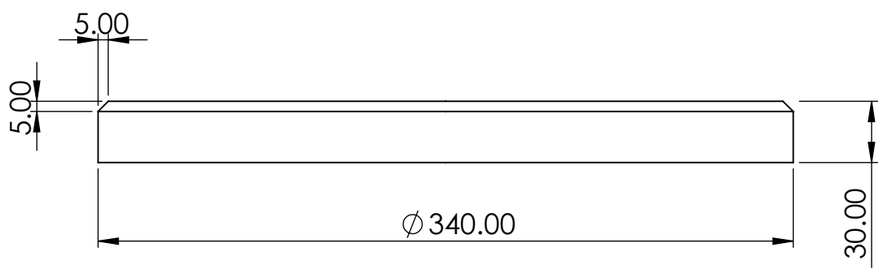

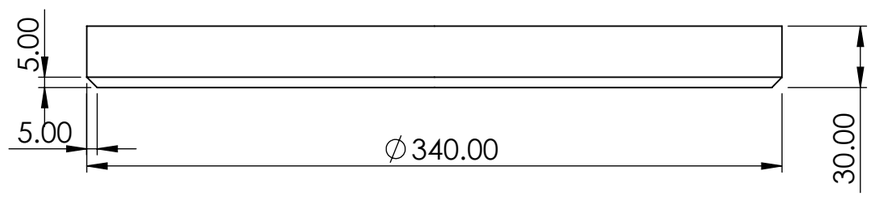

UNLESS OTHERWISE SPECIFIED: DIMENSIONS ARE IN MILLIMETERS SURFACE FINISH: Polished TOLERANCES: LINEAR: ±0.1mm ANGULAR: ±0.1deg	FINISH: Machined Mild Steel				DEBURR AND BREAK SHARP EDGES	DO NOT SCALE DRAWING / REVISION 01
	NAME	SIGNATURE	DATE			DYNASURF
DRAWN	B. Evans		13/10/23			TITLE: Top Plate & Bottom Plate
CHK'D						
APPV'D						
MFG						
Q.A				MATERIAL: Mild Steel		DWG NO. DS0002 / A3
				WEIGHT:		SCALE: 1:3 / SHEET 1 OF 1